Single Phase Motor - Capacitor Start & Run Connection Diagrams (Single & Dual Voltage)

DVE Series

① STARTING CAPACITOR

② WHITE-BLUE : STARTING WINDING TO REVERSE RUNNING

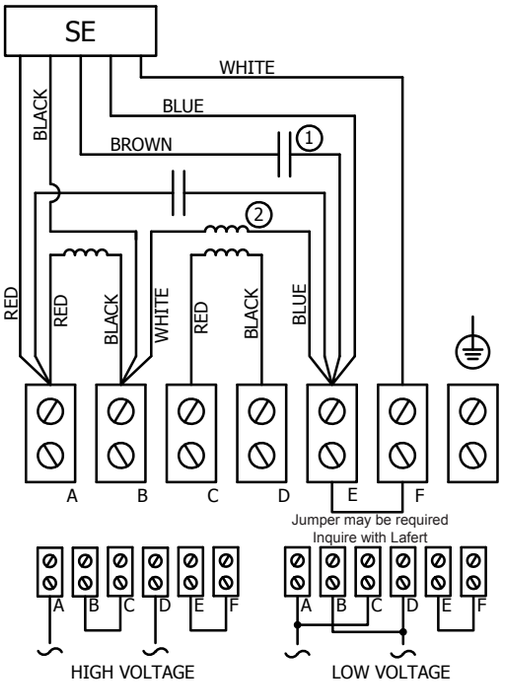

To Change Direction of Rotation, Switch Lead "A" with Lead "C"

DVE Motors are designed for high starting torque applications. DVE motors feature capacitor start and run making them suitable for most applications (i.e. Gearboxes, pumps, and machine tools).

See page 19 for DVE motor list.

LME Series

① STARTING CAPACITOR

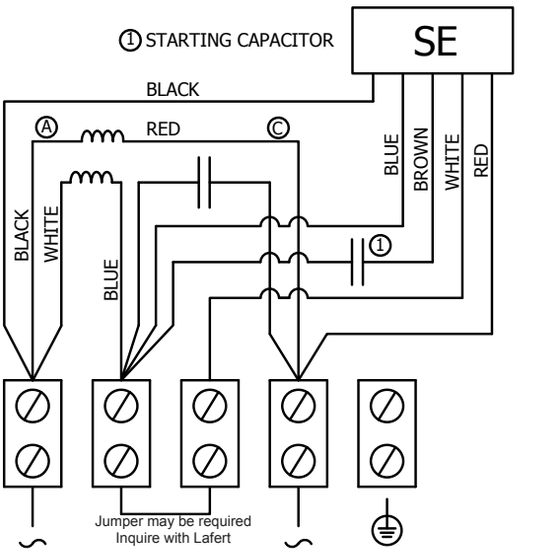

WHITE-BLUE : STARTING WINDING
RED-BLACK : RUNNING WINDING (A-C)
TO REVERSE RUNNING INVERT "A" and "C" LEADS

LM Series

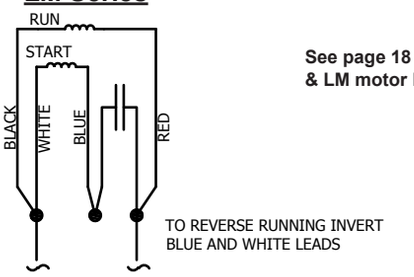

See page 18 for LME & LM motor list.