Technical Documentation

APH07565-841

Advantage Plus IEEE 841 | AEHH8B

Beaver Electrical Machinery
Date: June 6, 2022

TECO Westinghouse MOTORS (CANADA) INC.	Beaver Electrical Machinery Date: June 6, 2022	BEAVER

Dimensional Drawing

Catalogue	Type	HP	RPM	Voltage	Hz	Frame Size
APH07565-841	AEHH8B	75	1200	575	60	405T

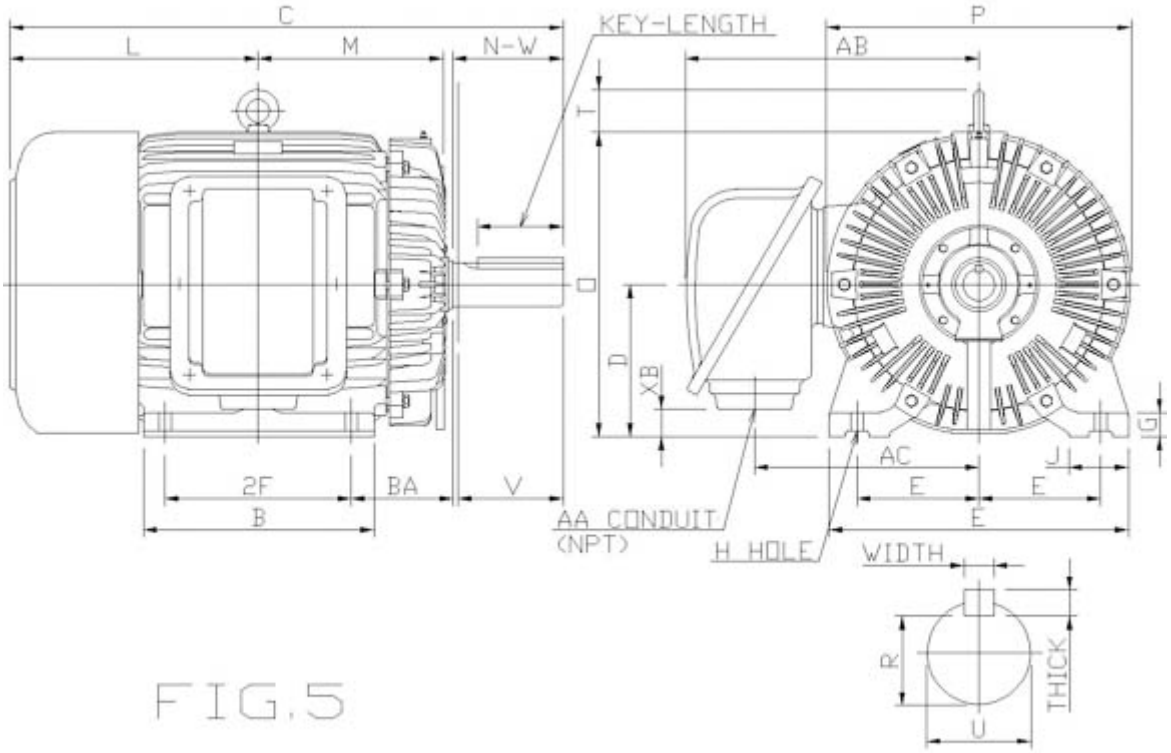

Mounting					A	B	C	CL1	CL2	D	G
E	2F1	2F2	H	BA							
8	13.75	12.25	0.81	6.62	19.68	16.73	37.99			10	1.57

J	K	L	M	O	P	T
3.94		17.24	13.27	20	20.08	3.54

Terminal Housing			
AA	AB	AC	XB
NPT3"	19.41	14.76	1.81

Shaft Extension			Key			Keyseat
N-W	U	V	Width	Thick	Length	R
7.25	2.875	7.16	0.75	0.75	5.65	2.45

Bearings		Weight Lbs	Drive Method	Dimensions
DE	NDE			
6317C3	6313ZC3	1340	Direct Coupling / Belt Drive	Inches

Technical Data Sheet

Motor Type: AEHH8B	Catalogue No: APH07565-841

Nameplate Information

HP	Pole	RPM	Frame	Voltage	Hz	Phase
75	6	1180	405T	575	60	3
Enclosure	Ins. Class	Service Factor	Time Rating	NEMA Design	Rated Amb.	Rated Altitude
TEFC	F	1.15	Continuous	B	-40 to 40 °C	<1000 m

Typical Performance

Efficiency (%)				Power Factor (%)		
Full Load		3/4 Load	1/2 Load	Full Load	3/4 Load	1/2 Load
Nom.	Min.					
94.5	93.6	94.5	94.5	86.5	84.5	79
Torque				Current (A)		
Full Load (lb-ft)	Locked Rotor (% FLT)	Pull Up (% FLT)	Break Down (% FLT)	No Load	Full Load	Locked Rotor
333.7	200	175	225	18.1	68.7	434.4
NEMA KVA Code	Inertia (WR^2)			Safe Stall Time (s)		Noise Level Sound Press. dB(A)
	Rotor ($lb\text{-}ft^2$)	NEMA Load ($lb\text{-}ft^2$)	Max. Allowable ($lb\text{-}ft^2$)	Cold	Hot	
G	37.862	904	2050	30	21	78

VFD Duty Information

Max HP	Current (A)	Speed Range		VFD		S.F.
		Constant Torque	Variable Torque	Carrier Hz	Type	
75	68.73	6-60Hz	3-60Hz	3-6kHz	VPWM or CPWM	1

Hazardous Locations Information

CSA Certified	
Class I, Div 2, Groups B, C & D Class I, Zone 2, Groups IIB+H2, IIB & IIA	
Temp Code (Sinewave / VFD)	T3C / T3

Additional Certifications

Other Certification

Additional Information

Bearings		Approx. Weight
DE	NDE	lbs
6317C3	6313ZC3	1340

Nameplate Drawing

Advantage Plus IEEE 841

TYPE	AEHH8B	CAT. NO.	APH07565-841		
OUTPUT	75 HP 55.95 kW	FRAME	405T	TEFC	
R.P.M.	1180	POLE	6	INS.	F
VOLTS	575	PHASE	3	Hz	60
AMPS	68.7	CODE	G	S.F.	1.15
AMBIENT	40 °C	NOM. EFF. 94.5		MIN. EFF. 93.6	
BEARINGS	6317C3 / 6313ZC3			RATING Cont.	

SER. NO.	TBD	DESIGN	B	WT. 1340 LBS

PWM VFD DUTY	VT	CT	CP	S.F.
	3-60Hz	6-60Hz	60-120Hz	1

Connection Diagram

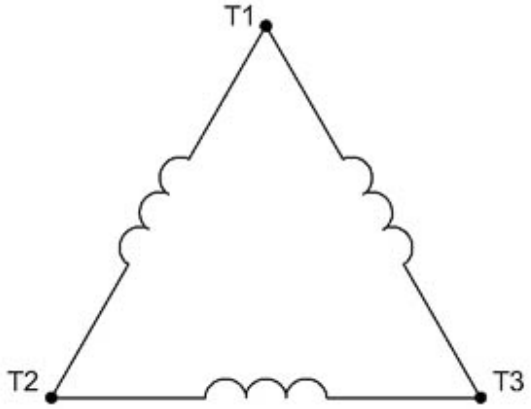

3 LEAD SINGLE VOLTAGE DELTA					
VOLTAGE	CONN.	L1	L2	L3	
-	DELTA	1	2	3	

WD_3D

Thermal Limit Curves

Motor Type: AEHH8B	Catalogue No: APH07565-841	Family: Advantage Plus IEEE 841

HP	75	Safe Stall Time		Full Load A	68.7 A
Voltage	575V 60Hz	Hot	21 s	% Inrush	632 %
RPM	1200	Cold	30 s	Locked Rotor A	434.4 A

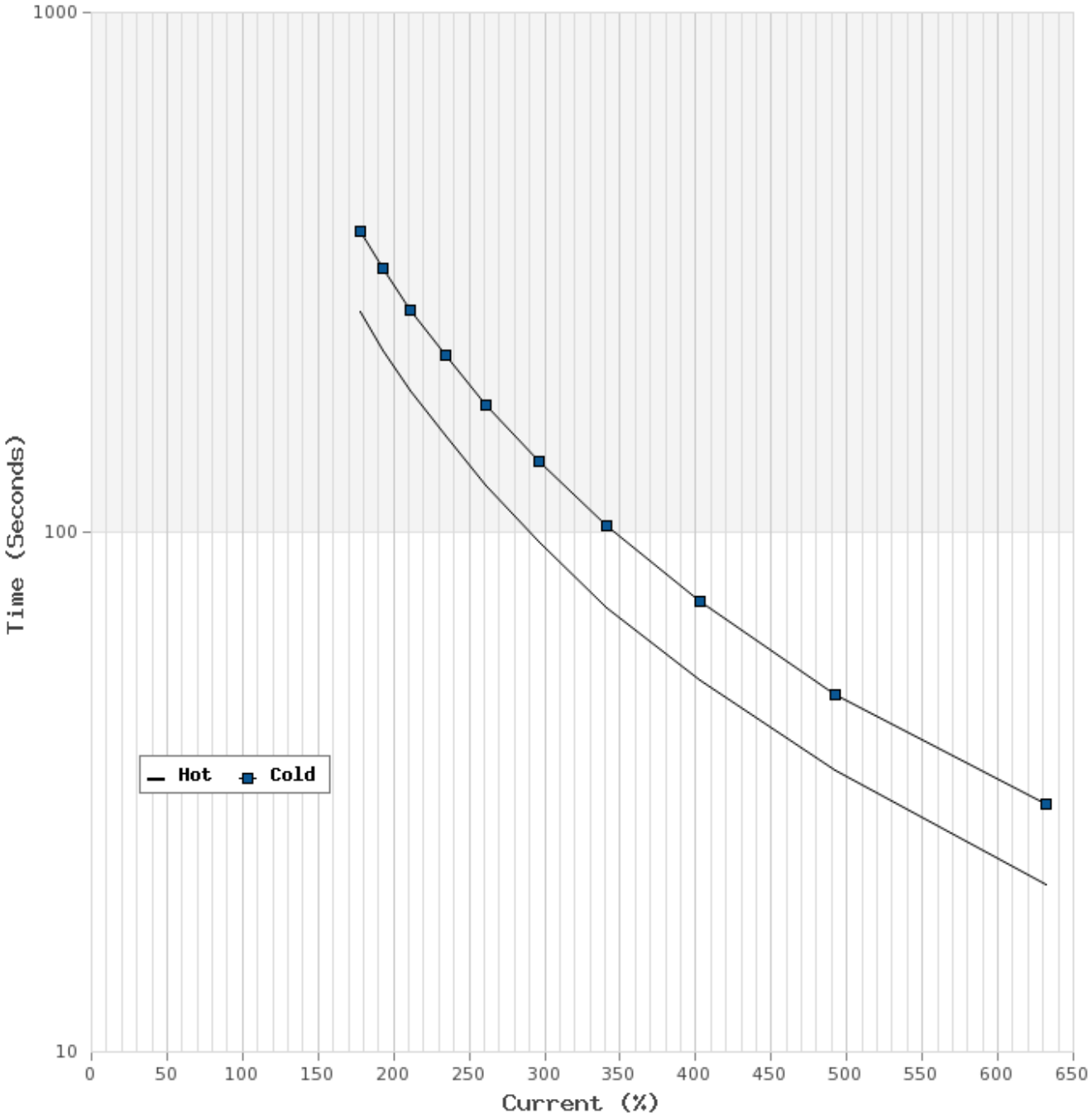

T-N and I-N Curves

Motor Type: AEHH8B	Catalogue No: APH07565-841	Family: Advantage Plus IEEE 841
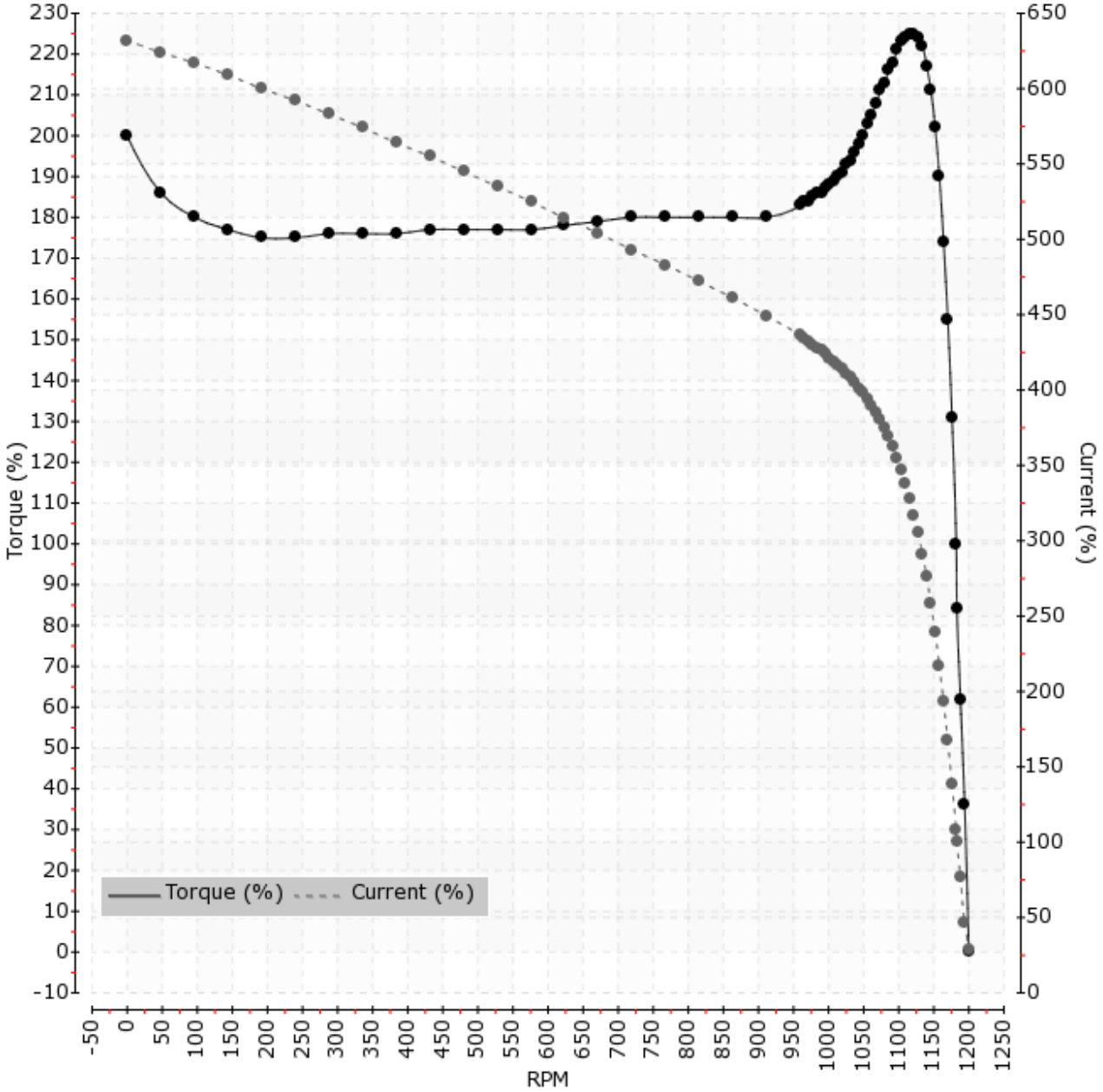
HP	75	Full Load T	333.7 lb-ft	Full Load A	68.7 A
Voltage	575V 60Hz	Locked Rotor T	200 %	Locked Rotor A	434.4 A
RPM	1200	Pull Up T	175 %	Break Down T	225 %